Rilevatori di presenza infrarossi

Infrared presence detector

HIR 23

CE IP20 DALI

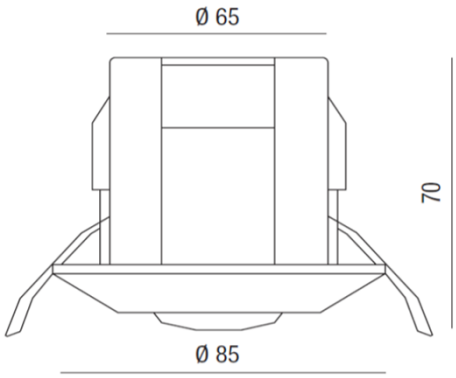

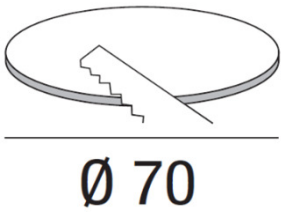

Tensione nominale entrata Nominal input voltage	Vdc	9,5÷22,5Vdc
Corrente ingresso Input current	mA	<8mA
Assorbimento a riposo Stand-by	W	<0,5W
Angolo di rilevamento Detection angle	°	360°
Area di rilevamento Detection Area		10m
Altezza di montaggio Mounting Height	m	2÷5 m
Sensibilità Sensibility	Lux	2-10-50-100-300-500-disable
Ritardo allo spegnimento Timing switch of delay		10"÷30'
Temperatura ambiente Ta° Ambient Temperature Ta°	°C	-20…+50

Angolo di rilevamento
Detection angle

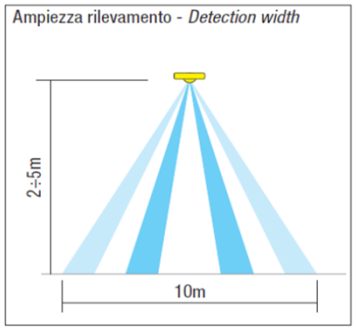

Angolo di rivelamento: 360°
Altezza di montaggio: 2÷5 metri
Ampiezza rilevamento: Ø 10m
Assorbimento stand by: < 0,5W
Max 64 Driver conforme allo standard DALI

Detection angle: *360°*
Assembly height: *2÷5 metres*
Detection Width: *Ø 10m*
Stand-by absorption: *< 0,5W*
Max 64 drivers compliant with DALI standard

4. DALI group selection

DALI group configuration can be done on PC or on the rotary switch:

1. There are 16 channels available on the rotary switch. "0" is for DALI broadcast, the rest 15 channels is for end user to define the application unit.
2. PC grouping can overwrite rotary switch grouping, the last setting controls.
3. The rotary switch channel is corresponding to the groups listed below:

DALI group selection (Please see the location in 2. Installation)

Switch channel	DALI group	Switch channel	DALI group
0	broadcast	8	group 7
1	group 0	9	group 8
2	group 1	A	group 9
3	group 2	B	group 10
4	group 3	C	group 11
5	group 4	D	group 12
6	group 5	E	group 13
7	group 6	F	group 14

Funzione di controllo della luce ambientale
Una volta impostati i LUX, il sensore esegue una comparazione tra la luce naturale (esterna) e quella artificiale (interna), regolando, tramite protocollo DALI, il driver al raggiungimento del livello luminoso desiderato.
Daylight Harvest (Daylight Regulation)
Daylight sensor measures the available surronding natural light, calculates how much elecrical light is needed to reach the total lux expected. The demand is given to he LED driver by DALI signal, so as to deliver the needed amount of electric light

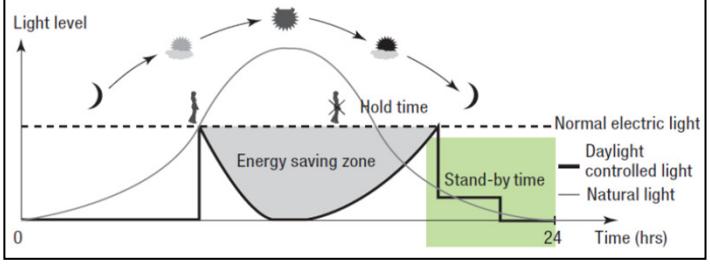

RELCO group persegue una politica di continua ricerca e sviluppo, quindi si riserva di variare in qualsiasi momento e senza preavviso le caratteristiche dei prodotti.

RELCO group pursues a policy of continuous research and development and rereserves the right to change at any time and without prior notice, the characteristics of the products.